UK Flowtechnik

Tyre Couplings

0115 901 7111 | ukflowtechnik.com | sales@ukflowtechnik.com

Tyre Couplings

UK Flowtechnik Tyre Couplings provide an ideal flexible coupling for reducing vibration levels and shock loads, as well as accommodating mis-alignment. Tyre Couplings create a torsionally elastic coupling and offer a choice of flange combinations to suit most applications. The flanges are available in either Face or hub Taper Bush fitting, or can be bored to size, increasing the versatility for designers and engineers. The couplings can accommodate standard distances between shaft ends through the addition of a spacer flange. This simple addition can facilitate with Equipment maintenance.

Tyre Couplings are comprised of symmetrical shapes which ensures balance and safety while minimising the existing disparity in any assembly. Replacing the tire rubber parts is quick and simple process which can be performed without displacing the equipment, significantly reducing machine downtime. Maintenance costs are also reduced compared to other assemblies because Tire coupling components do not require lubrication.

The flexible tire provides excellent shock-absorbing Properties which reduce vibration and torsional oscillation. By isolating the vibrations between machines and motors, workplace noise emissions are considerably reduced, greatly improving the workplace environment. In addition to mechanical isolation, Tyre Couplings ensure perfect electrical isolation between shafts, removing a important cause of bearing failure.

UK Flowtechnik Tyre Couplings are interchangeable with many of the industry standard products.

Tyre Coupling Types

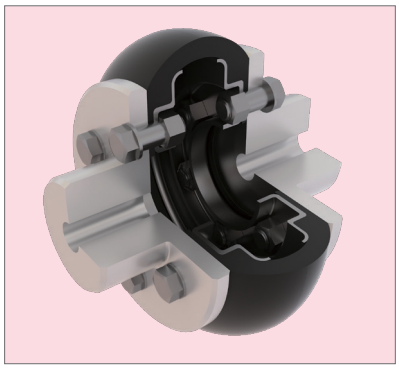

KCS-L Type

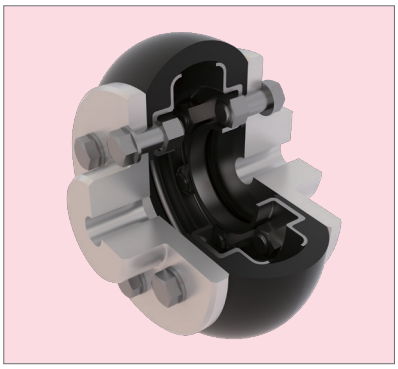

KCS-P Type

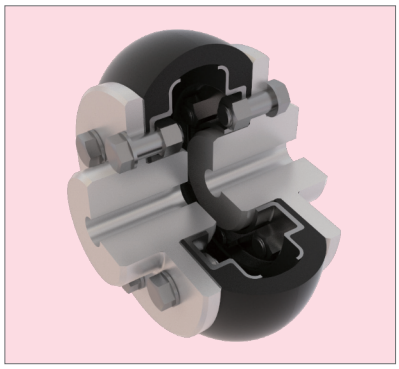

KCS-M Type

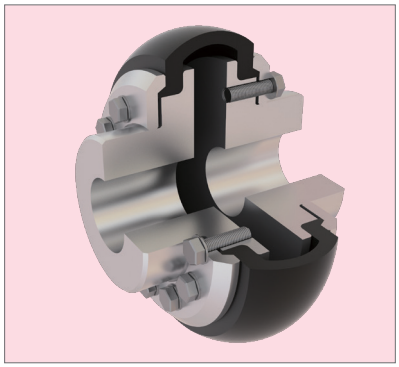

KRB Type

KRF Type

KCS-L Type

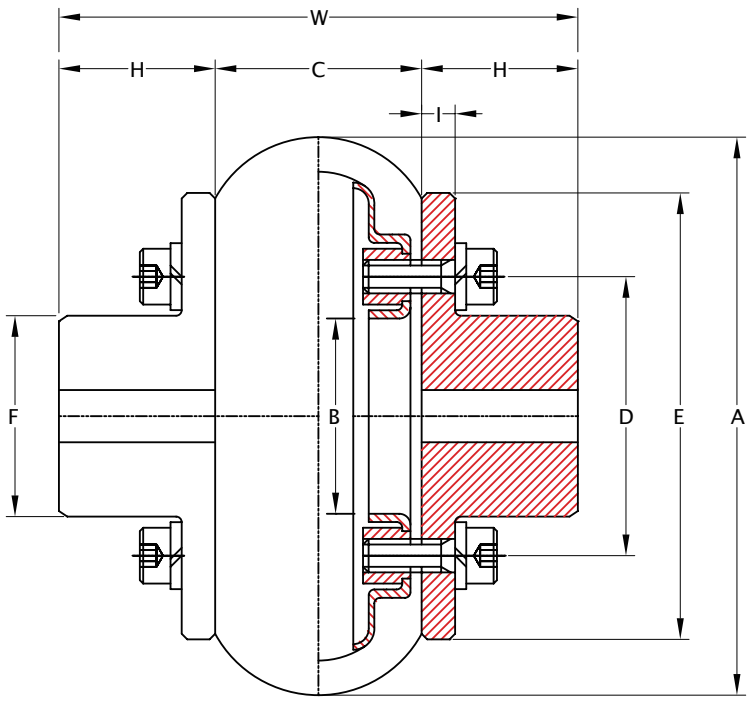

Size	Torque Rating (Nm)	Allow Speed RPM	Max Bore (mm)	Min Bore (mm)	Cplg Weight (Kg)	GD^2 ($Kg.cm-S^2$)	Dimensions (Millimeters)									Hexa Bolt
							A	B	C	D	E	F	H	I	W	
100	50	5,000	22	8	1.1	0.0089	100	35	37	50	82	36	28	6	93	2 x 6 x M6 x 18L
120	98	4,500	28	10	2.0	0.0200	120	45	39	65	106	48	35	6	109	2 x 6 x M8 x 18L
140	147	4,200	35	24	3.0	0.0420	140	52	45	75	118	55	44	7	133	2 x 6 x M10 x 22L
160	216	4,000	42	24	4.5	0.0770	160	62	51	85	132	65	53	8	157	2 x 6 x M24 x 70L
185	294	3,600	48	34	6.6	0.1450	185	74	58	100	154	77	60	10	178	2 x 6 x M10 x 22L
220	490	3,200	55	34	11.8	0.3300	220	84	67	112	180	89	69	12	205	2 x 6 x M12 x 25L
265	980	2,600	75	40	21.7	0.9700	265	112	82	140	214	117	94	14	270	2 x 6 x M12 x 28L
340	1,617	2,100	95	44	46.5	3.2000	340	142	106	180	272	150	120	18	346	2 x 6 x M12 x 32L
445	4,900	1,600	128	54	110.0	12.2000	445	190	139	236	344	202	160	25	459	2 x 6 x M16 x 45L
550	9,800	1,200	170	64	187.0	32.0000	550	230	173	290	430	246	170	26	513	2 x 6 x M18 x 56L
700	19,600	1,000	220	84	394.0	91.0000	700	310	220	370	544	326	220	26	660	2 x 6 x M24 x 70L

* Coupling Weight is without Bore Machining

KCS-P Type

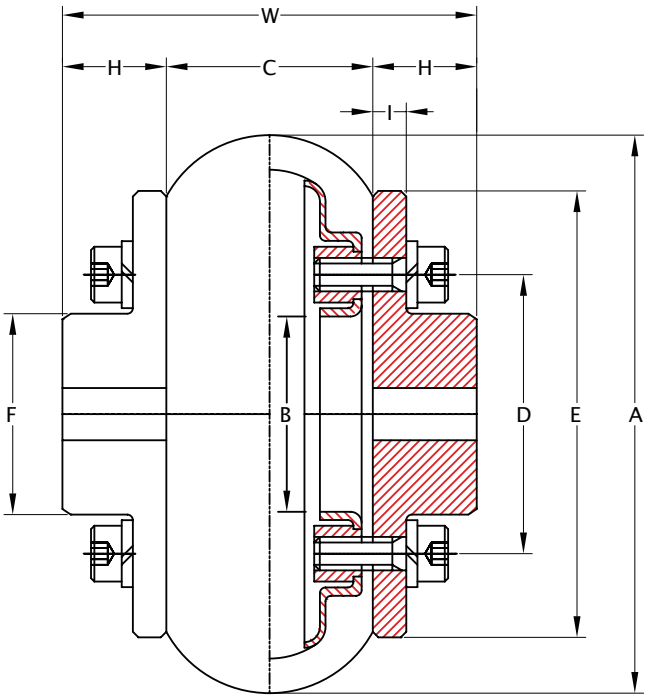

Size	Torque Rating (Nm)	Allow Speed RPM	Max Bore (mm)	Min Bore (mm)	Cplg Weight (Kg)	GD² (Kg.cm-S²)	Dimensions (Millimeters)									Hexa Bolt
							A	B	C	D	E	F	H	I	W	
100	50	5,000	22	8	1.0	0.0086	100	35	37	50	82	36	18	6	73	2 x 6 x M18 x 56L
120	98	4,500	28	10	1.9	0.0210	120	45	39	65	106	48	23	6	85	2 x 6 x M24 x 70L
140	147	4,200	35	14	2.8	0.0420	140	52	45	75	118	55	28	7	101	2 x 6 x M24 x 70L
160	216	4,000	42	18	4.3	0.0790	160	62	51	85	132	65	34	8	119	2 x 6 x M16 x 45L
185	294	3,600	48	24	6.5	0.1480	185	74	58	100	154	77	40	10	138	2 x 6 x M6 x 18L
220	490	3,200	55	30	10.4	0.3300	220	84	67	112	180	89	44	12	155	2 x 6 x M8 x 18L
265	980	2,600	75	40	18.8	0.9500	265	112	82	140	214	117	60	14	202	2 x 6 x M10 x 22L
340	1,617	2,100	95	44	41.5	3.4000	340	145	106	180	272	150	76	18	258	2 x 6 x M10 x 22L
445	4,900	1,600	128	54	87.4	11.6000	445	190	139	236	344	202	103	25	345	2 x 6 x M12 x 25L
550	9,800	1,200	170	64	165.0	30.0000	550	230	173	290	430	246	136	26	445	2 x 6 x M12 x 28L
700P	19,600	1,000	220	84	355.0	84.0000	700	310	220	370	544	326	176	26	572	2 x 6 x M12 x 32L

* Coupling Weight is without Bore Machining

KCS-M Type

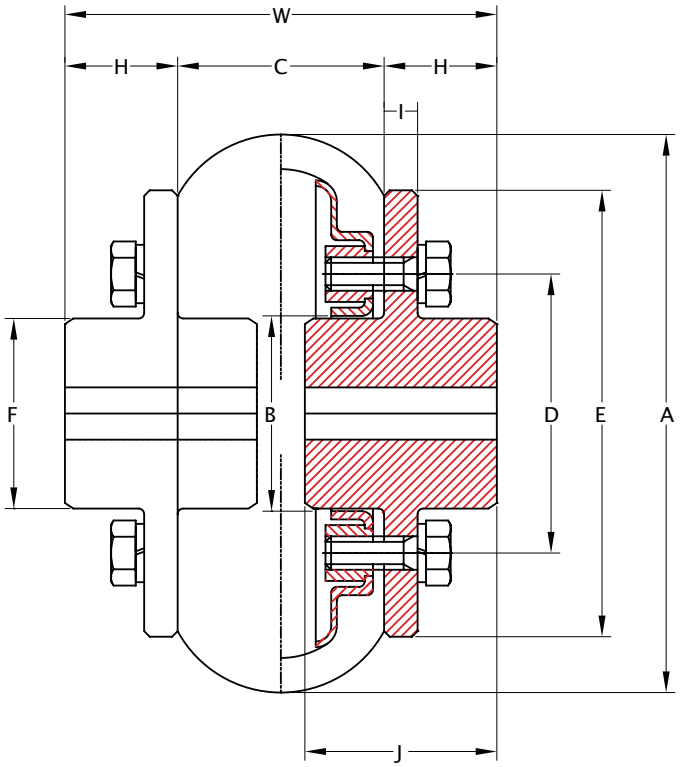

Size	Torque Rating (Nm)	Max Bore (mm)	Min Bore (mm)	Cplg Weight (Kg)	GD² (Kg.cm-S²)	Dimensions (Millimeters)										Hexa Bolt
						A	B	C	D	E	F	H	I	J	W	
100	50	20	8	1.0	0.0086	100	35	37	50	82	34	11	6	25	59	2 x 6 x M24 x 71L
120	98	26	10	1.9	0.0210	120	45	39	65	106	44	18	6	32	75	2 x 6 x M18 x 50L
140	147	30	14	2.8	0.0420	140	52	45	75	118	51	21	7	37	87	2 x 6 x M24 x 71L
160	216	36	18	4.3	0.0790	160	62	51	85	132	61	27	8	45	105	2 x 6 x M6 x 18L
185	294	44	24	6.5	0.1500	185	74	58	100	154	72	34	10	55	126	2 x 6 x M8 x 18L
220	490	50	30	10.4	0.3200	220	84	67	112	180	82	36	12	60	139	2 x 6 x M10 x 20L
265	980	66	40	18.8	0.9600	265	112	82	140	214	110	50	14	80	182	2 x 6 x M10 x 22L
340	1,617	85	44	41.5	3.4000	340	142	106	180	272	140	61	18	100	228	2 x 6 x M12 x 25L
445	4,900	115	54	87.4	11.4000	445	190	139	236	344	188	69	25	120	277	2 x 6 x M12 x 28L
550	9,800	160	64	165.0	29.0000	550	230	173	290	430	228	97	26	160	367	2 x 6 x M12 x 28L
700	19,600	210	84	355.0	83.0000	700	310	220	370	544	308	182	26	210	476	2 x 6 x M16 x 40L

* Coupling Weight is without Disc and Bore Machining

KRB Type

KRF Type

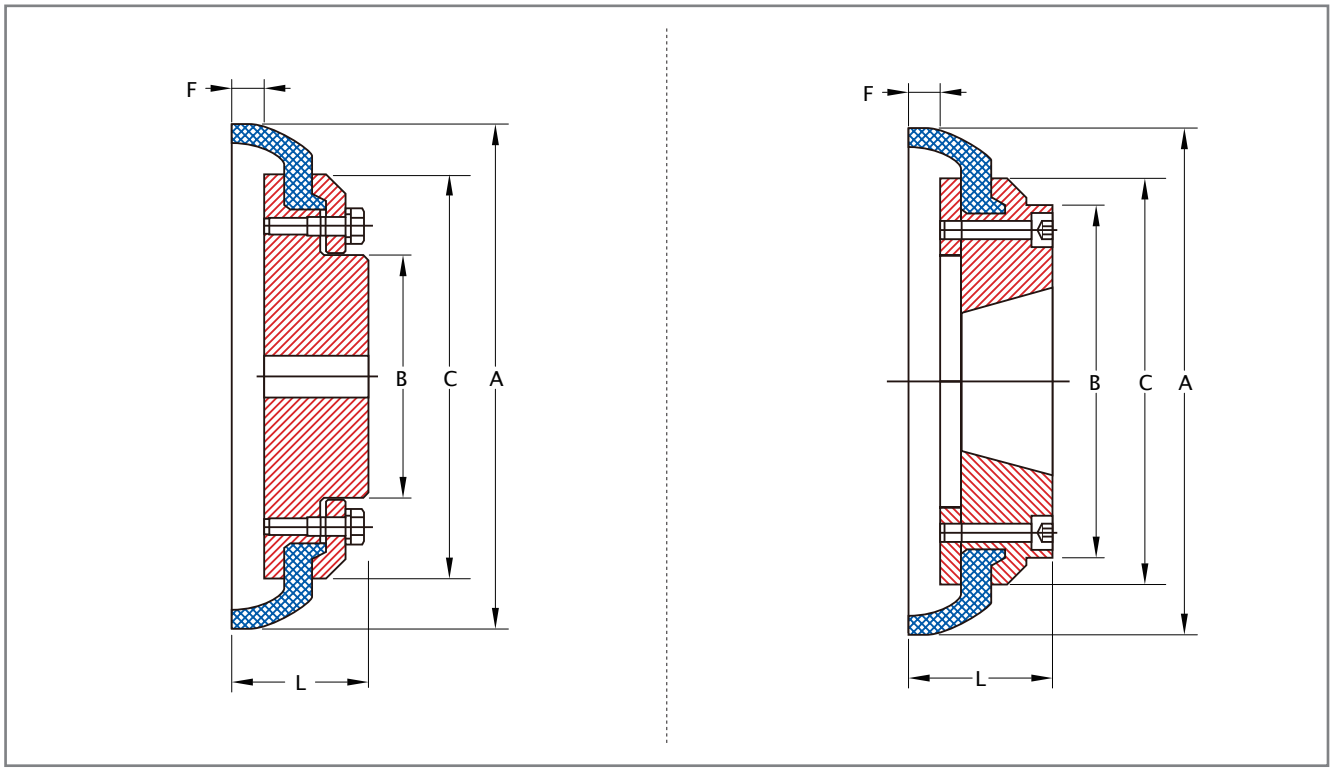

KRB Type

Size	Torque Rating (Nm)	Peak Torque Rating (Nm)	Allow Speed RPM	Max Bore (mm)	Cplg Weight (Kg)	Max. Parallel Misalignment (mm)	Max. End Float (mm)	Wrench Space (mm)	Dimensions (Millimeters)					Busing No.	Flange Fastners		
									A	B	C	F	L		Size	Torque (Nm)	Per Flange
40	25	65	5,730	32	1.00	1.1	1.3	–	104	–	82	11	33.0	H7	M5	6	4
50	65	160	4,500	38	1.89	1.3	1.7	–	133	79	100	13	45.0	H7	M6	11	4
60	125	320	4,000	45	3.17	1.6	2.0	–	165	70	125	17	55.0	H7	M6	11	10
70	250	490	3,600	50	3.52	1.9	2.3	–	187	80	144	12	47.0	H7	M8	28	10
80	380	760	3,100	60	5.24	2.1	2.6	–	211	98	167	13	55.0	H7	M8	28	12
90	500	1,100	2,800	70	7.53	2.4	3.0	–	235	112	188	14	63.5	H7	M10	55	12
100	670	1,520	2,600	80	10.93	2.6	3.3	–	254	125	216	14	70.5	H7	M10	55	12
110	880	2,140	2,300	90	13.50	2.9	3.7	–	279	128	233	13	75.5	H7	M10	55	12
120	1,330	3,550	2,100	100	19.20	3.2	4.0	–	314	143	264	15	84.5	H7	M12	99	12
140	2,330	5,640	1,840	130	31.81	3.7	4.6	–	359	178	311	16	110.5	H7	M12	99	16
160	3,770	9,340	1,560	140	42.53	4.2	5.3	–	402	187	345	15	117.0	H7	M16	245	16
180	6,270	16,450	1,500	150	57.60	4.8	6.0	–	470	200	398	23	137.0	H7	M16	245	20
200	9,330	23,500	1,300	150	71.50	5.3	6.6	–	508	200	429	24	138.0	H7	M16	245	24
220	11,600	33,120	1,100	160	90.00	5.8	7.3	–	562	218	474	28	154.5	H7	M20	477	24
250	14,680	42,740	1,000	190	112.00	6.6	8.2	–	628	254	532	30	161.5	H7	M20	477	28

KRF Type

Size	Torque Rating (Nm)	Peak Torque Rating (Nm)	Allow Speed RPM	Max Bore (mm)	Cplg Weight (Kg)	Max. Parallel Misalignment (mm)	Max. End Float (mm)	Wrench Space (mm)	Dimensions (Millimeters)					Busing No.	Flange Fastners		
									A	B	C	F	L		Size	Torque (Nm)	Per Flange
40	25	65	5,730	25	0.93	1.1	1.3	29	104	–	82	11	33.0	1008	M5	6	4
50	65	160	4,500	32	1.36	1.3	1.7	38	133	79	100	13	38.0	1210	M6	11	4
60	125	320	4,000	42	2.28	1.6	2.0	38	165	103	125	17	42.0	1610	M6	11	10
70	250	490	3,600	50	2.55	1.9	2.3	42	187	80	144	12	44.0	2012	M8	28	10
80	380	760	3,100	60	4.15	2.1	2.6	48	211	97	167	13	58.0	2517	M8	28	12
90	500	1,100	2,800	60	6.37	2.4	3.0	48	235	108	188	14	59.5	2517	M10	55	12
100	670	1,520	2,600	75	8.64	2.6	3.3	55	254	120	216	14	65.5	3020	M10	55	12
110	880	2,140	2,300	75	10.86	2.9	3.7	55	279	134	233	13	63.5	3020	M10	55	12
120	1,330	3,550	2,100	100	15.18	3.2	4.0	67	314	140	264	15	79.5	3525	M12	99	12
140	2,330	5,640	1,840	100	25.81	3.7	4.6	67	359	178	311	16	81.5	3525	M12	99	16
160	3,770	9,340	1,560	115	34.26	4.2	5.3	80	402	197	345	15	92.0	4030	M16	245	16
180	6,270	16,450	1,500	125	47.20	4.8	6.0	89	470	205	398	23	112.0	4535	M16	245	20
200	9,330	23,500	1,300	125	61.00	5.3	6.6	89	508	205	429	24	113.0	4535	M16	245	24
220	11,600	33,120	1,100	125	77.00	5.8	7.3	92	562	223	474	28	129.5	5040	M20	477	24

* Coupling Weight is without Bore Machining